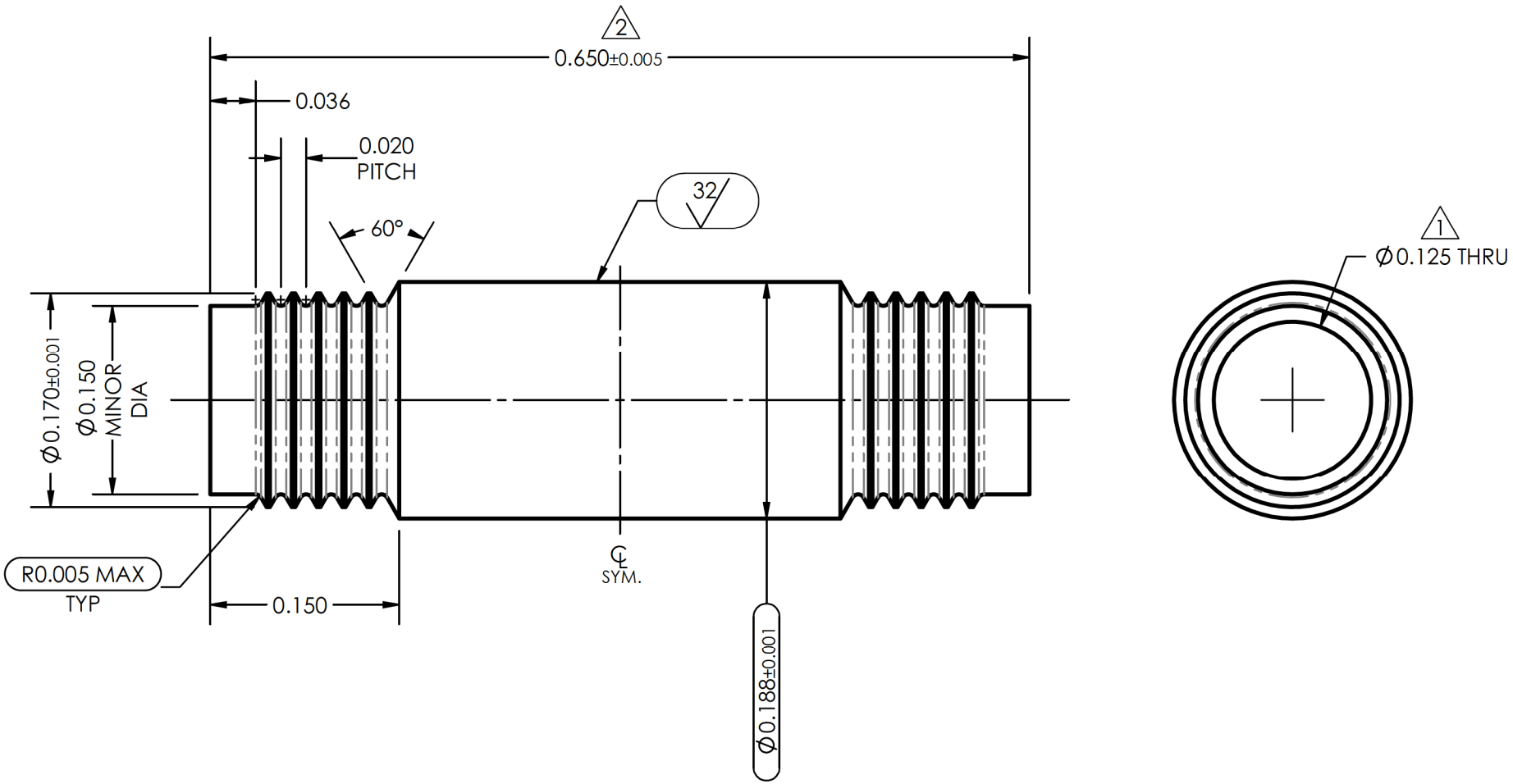

REV.	DATE	REVISION DESCRIPTION	BY	ENG APR	MFG APR	ECN #
2	3/25/2021	FINISH WAS P&P, UPDATED SHEET FORMAT, 0.650 TOL WAS ±0.003	MDS	CJL	MKE	9348
1	7/29/2014	MATERIAL WAS 304SS TUBING, Ø0.125 WAS REF	MDS	MDL	MJC	

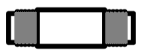

ACTUAL SIZE

DIMENSIONS IN OVALS ARE KEY PRODUCT CHARACTERISTICS

UNLESS OTHERWISE SPECIFIED:
- DIMENSIONS IN INCHES
- ALL DIMENSIONS PRIOR TO FINISHING
- REMOVE ALL BURRS AND BREAK SHARP EDGES WITH 0.010 MAX RADIUS OR CHAMFER

TOLERANCES UNLESS OTHERWISE SPECIFIED:

DECIMAL: ± 0.003

ANGULAR: ± 1 °

SURFACE FINISH: 63 ✓

SHEAR TUBE
57MM CARBO T2 AUTO RATCHET BLOCK

MATERIAL: 316 SS 1 -

FINISH: PASSIVATE 2

DRAWING NUMBER	H-64089	REV.	2
PART #	SP-096		
SHEET NUMBER:	1/1	SCALE:	8:1
DESIGN BY :	MDS	DATE:	6/4/2013
DRAWN BY :	MDS	DATE:	6/4/2013
ENG. APR :	GSW	DATE:	10/11/2013
MFG. APR :	MJC	DATE:	10/11/2013